Deck Wheel Kit

For 38 Inch and 42 Inch Decks on 600 Series Box Frame Tractors

Model OEM-190-183

SECTION 2: CONTENTS OF CARTON

Before beginning installation, remove all parts from the carton to make sure everything is present. Carton contents are listed below. Part numbers are shown in parentheses. Quantities are shown in brackets.

- 1 - Wheel Bracket LH - (783-04017) [Qty. 1]
- 2 - Wheel Bracket RH - (783-04016) [Qty. 1]
- 3 - Deck Wheels - (734-0973) [Qty. 2]
- 4 - 3/8-16 Shoulder Screws - (738-0373) [Qty. 2]
- 5 - 3/8-16 Flange Lock Nuts - (712-0431) [Qty. 2]
- 6 - 5/16-18 Flange Lock Nuts - (712-3004A) [Qty. 6]
- 7 - 5/16-18 Hex Head Bolts - (710-3025) [Qty. 6]

SECTION 3: ASSEMBLY

Tools Required for Installation:

- You will need the following tools: 1/2" box wrench; 1/2" open end wrench; 9/16" box wrench; 3/4" box wrench or socket and ratchet drive; a 3/16" pin punch; hammer and two 3 1/2" high x 24 "long wood blocks.

WARNING: Before beginning installation, place the tractor on a firm and level surface. Place the PTO in the disengaged (OFF) position, stop the tractor engine and set the parking brake.

NOTE: *References to LEFT and RIGHT indicate the left and right sides of the tractor when facing forward in the operator's position. Reference to the FRONT indicates the grille end; to the REAR the drawbar end.*

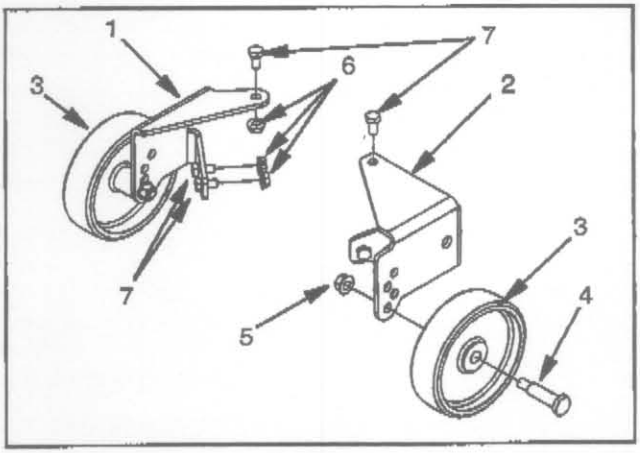

Figure 1